GREENSAW

https://www.youtube.com/c/greensaw

Dimensions

All Dimensions are in milimeters

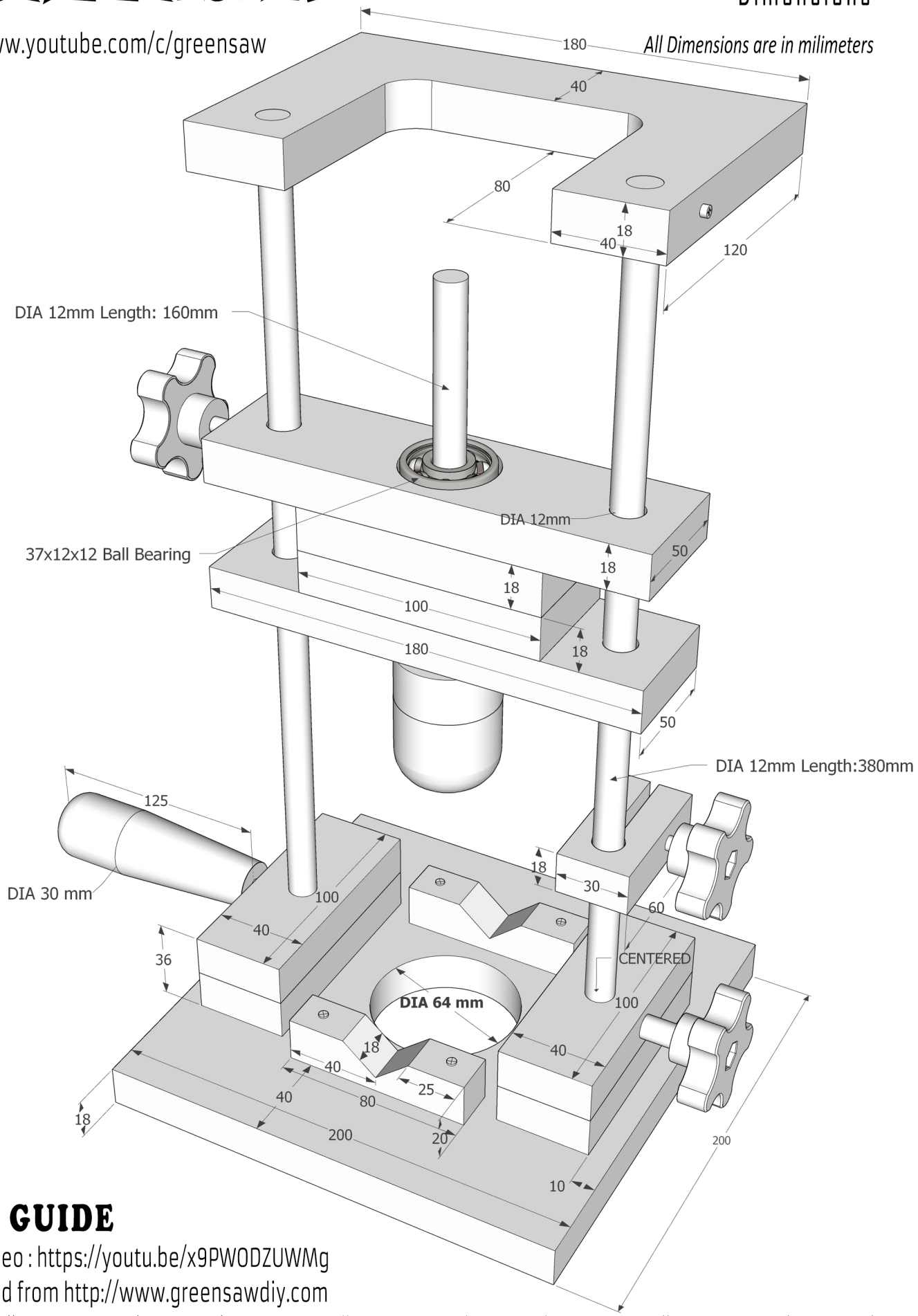

DRILL GUIDE

Making Video : https://youtu.be/x9PWODZUWMg

Downloaded from http://www.greensawdiy.com